DIMENSION TABLE	MGT-_____
L=_____	RT=_____
W=_____	BT=_____
H=_____	

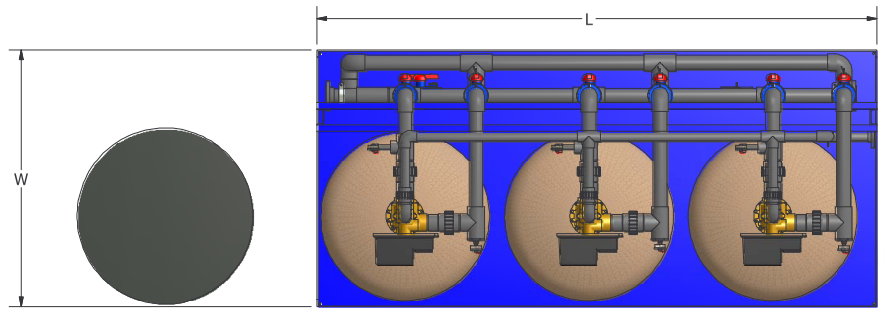

PLAN VIEW

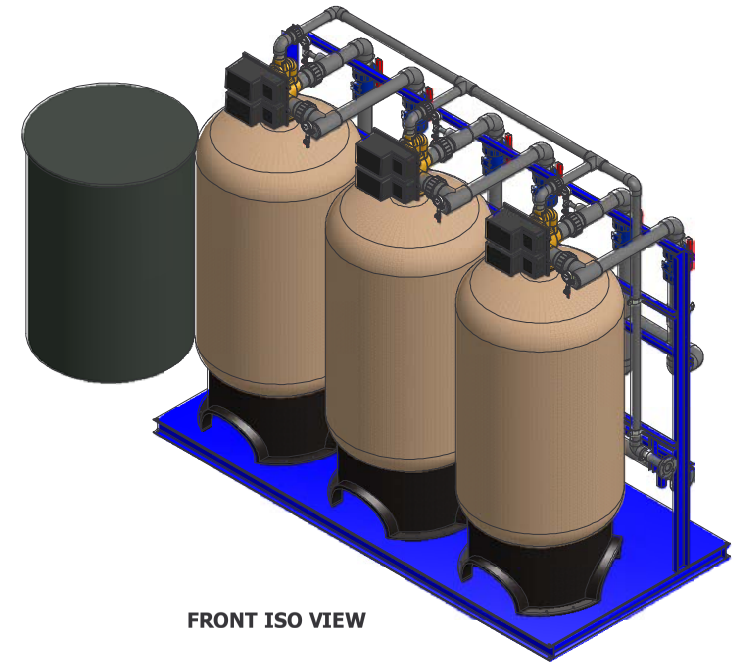

FRONT ISO VIEW

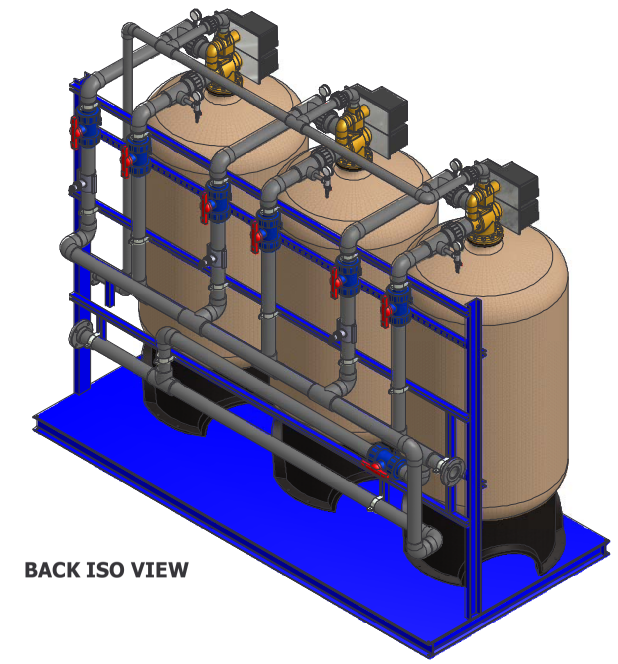

BACK ISO VIEW

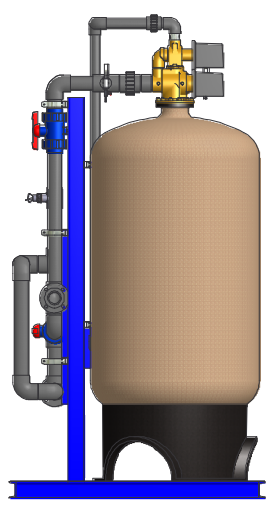

LEFT SIDE VIEW

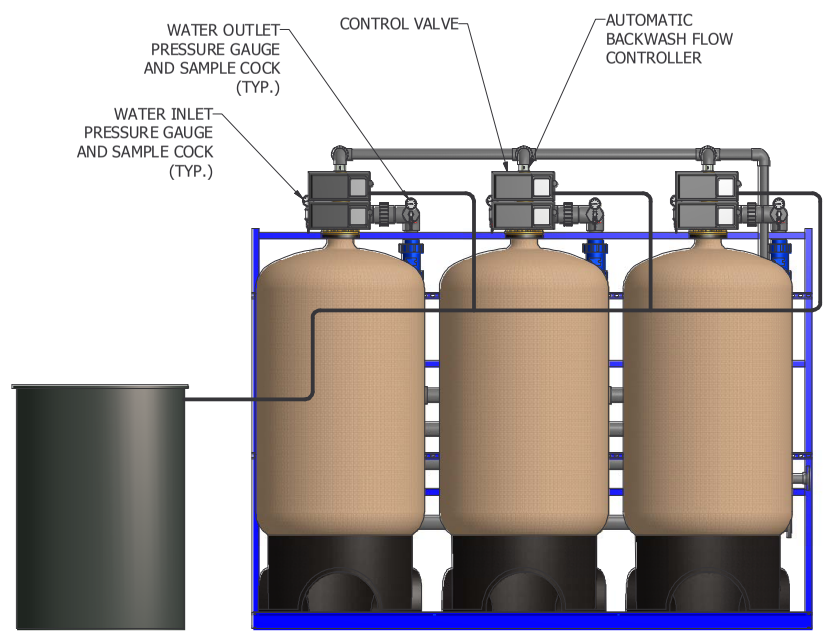

FRONT VIEW

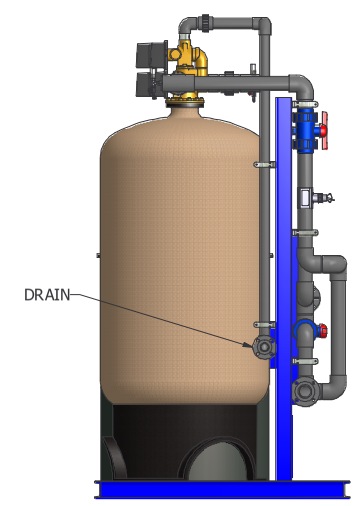

RIGHT SIDE VIEW

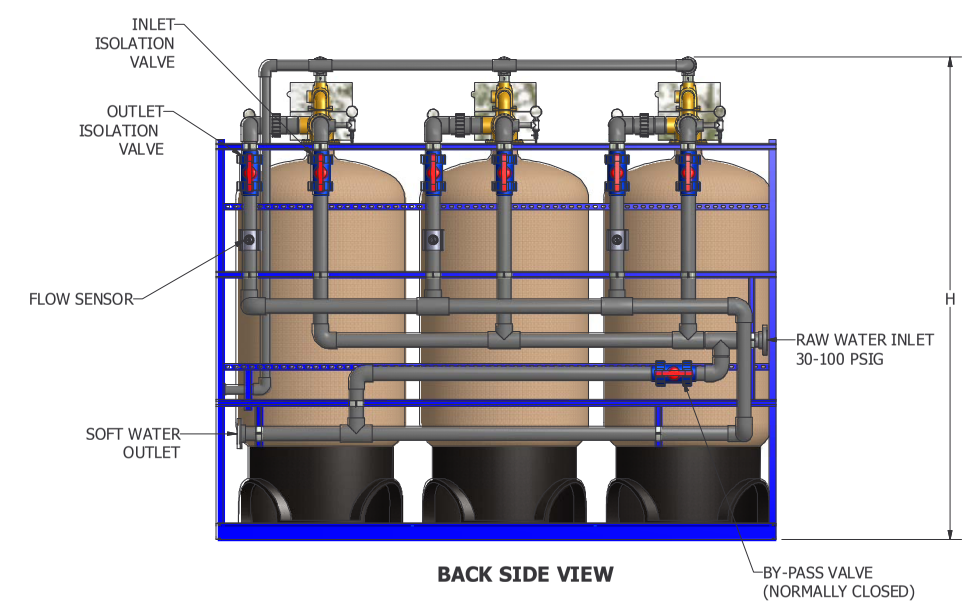

BACK SIDE VIEW

REVISIONS			
NO.	DATE	BY	REMARKS

MARLO INCORPORATED

MGT TRIPLEX PARALLEL WATER SOFTENER
SKID MOUNTED SYSTEM

FRAC. ±	DEC. ±	FILE ID.	
DRN. AJJG		SCALE	SHEET 1 OF 1
APP'D.		DRAWING NO. MGT TRIPLE PAR SKID	REV.
DATE 4/21/2009			

5-232